Grade 11 Mathematical Literacy: November Exam P2

MARKS: 125

QUESTION 1

Your friend, Bongani, wants to get a new cell phone and has to decide whether to take Contract 1 or Contract 2. The terms are as follows:

Contract 1	Contract 2
200 free minutes each month Pay R100 per month Additional minutes are billed at 40c per minute.	Pay R150 per month Minutes are billed at 20c per minute.

Contract 1: Cost = R100 + R0.40(number of minutes used – free minutes)

Contract 2: Cost = R150 + R0.20(number of minutes used)

Bongani has to use his phone every day (30 days a month) for an average of 20 minutes.

1.1 Which contract would be more cost effective for Bongani? (6)

1.2 Draw a graph from 0 – 600 minutes, showing the costs for Contract 1 and Contract 2 (on the same set of axes). (7)

1.3 Decide which contract (1 or 2) would be more cost effective for each of the following people. Give a short reason for your choice in each case.

1.3.1 A busy businessman who uses his phone all the time. (1)

1.3.2 An old lady who can't hear very well. (1)

1.4 How much money does the phone company receive each month if it has 4 000 Contract 1 customers using an average of 400 minutes per month and 6 000 Contract 2 customers using an average of 650 minutes per month? (4)

1.5 Bongani gets a job working for the phone company earning R7300 a month. The following tax table applies to his salary:

Annual taxable income is …	**Tax rates**
Less than R80 000	18% of each rand.
Between R80 000 and R130 000	R14 400 plus 25% of the amount by which taxable income exceeds R80 000.
Between R130 000 and R180 000	R26 900 plus 30% of the amount by which taxable income exceeds R130 000.
Between R180 000 and R230 000	R41 900 plus 35% of the amount by which taxable income exceeds R180 000.
Between R230 000 and R300 000	R59 400 plus 38% of the amount by which taxable income exceeds R230 000.
More than R300 000	R86 000 plus 40% of the amount by which taxable income exceeds R300 000.

1.5.1 How much tax is Bongani liable to pay per year? (4)

1.5.2 Each tax bracket has a basic amount. For the R80 000 to R130 000 bracket, this basic amount is R14 400. This is not just a random amount. How is this amount determined? Explain and give a calculation to support your answer. (2)

1.6 Bongani is thinking about buying a flat. The bank will grant him a housing loan if he pays 10% of the house price as a deposit. If he has R45 000 that he saved for a deposit, then what is the maximum price that he can afford? (2)

1.7 Bongani wants to order a new phone from overseas as it is not yet available in South Africa. He has found the phone he is looking for in America for $235 and in England for £195. The following exchange rates apply:

$1 : R13.80
£1 : R21.28

Where should he buy the phone from to get the best price in Rands? (3)

[30]

QUESTION 2

Mrs Morake has a small take-away shop. The shop has two rooms, a kitchen at the back of the shop and a room at the front where the customers are served. The dimensions of the shop are as follows:

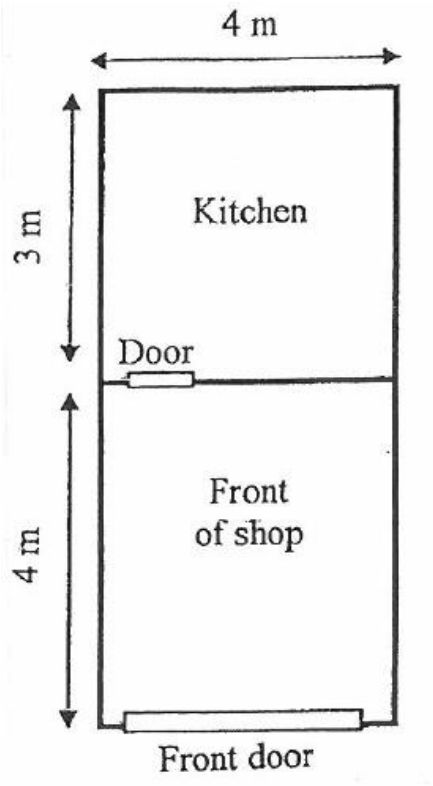

- The area of the front door is 9 m²
- The dimensions of the door in-between the front of the shop and the kitchen are 0.8 m by 2.04 m.
- All walls are 3 m high.

2.1 In November 2013 Mrs Morake inherited R120 000. She invested this in a bank at 8.6% p.a. compounded annually. Calculate the amount of money she would have from this investment this November (2015) to invest in the shop. (4)

2.2 Mrs Morake needs a new oven for kitchen in the shop. She can buy one for R6 299 cash or she can get the same oven on hire purchase. The hire purchase agreement requires a 10% cash deposit and 24 monthly repayments of R334.

2.2.1 How much will she pay for the oven on Hire purchase? (3)

2.2.2 Would you advise Mrs Morake to pay cash or buy on credit? Justify your answer. (2)

2.3 Mrs Morake has decided to paint the inside walls of the front of the shop.

2.3.1 Calculate the inside surface area of the walls. (5)

2.3.2 One 5-litre tin of paint can cover an area of 36 m². How many 5-litre tins must Mrs Morake buy in order to paint **two** coats of paint on the walls? (4)

2.4 If the cost to tile a floor (materials and labour) is R174,95 per m², calculate the cost to tile both the front of the shop and the kitchen. (3)

2.5 Mrs Morake wants to stick a decoration around the door leading to the kitchen. The decoration must be 10 cm away from the door frame.

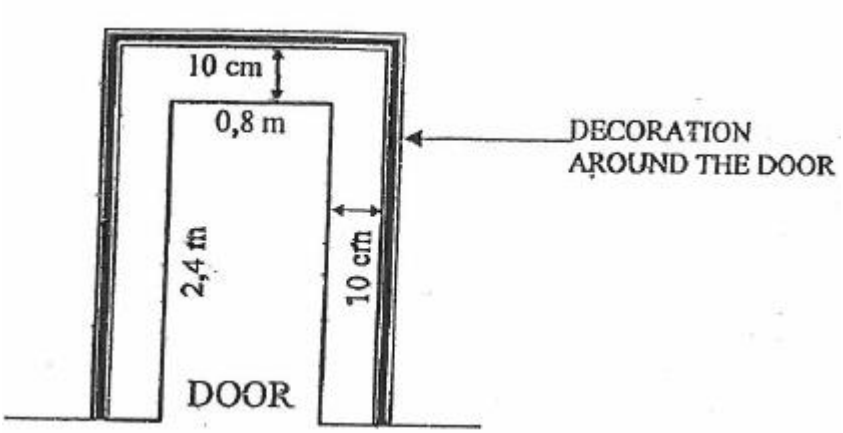

(Adapted from GDE)

How many meters of the decoration must she buy? (4)

2.6 Mrs Morake has asked a friend to design and build her a garage next to the shop. The picture below shows the plan of the proposed new garage. The garage will be joined to the shop and a door will lead from the garage into the front of the shop:

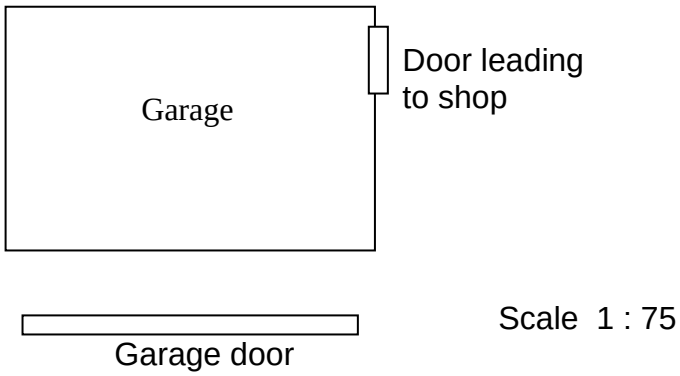

(Image by Educator)

If the average width of a car is approximately 1,7 m will one or two cars be able to fit comfortably in the garage? Show all working. (5)

[30]

QUESTION 3

You are helping design a large swimming pool for a block of flats. The pool is rectangular with two semi-circles on each end as shown below:

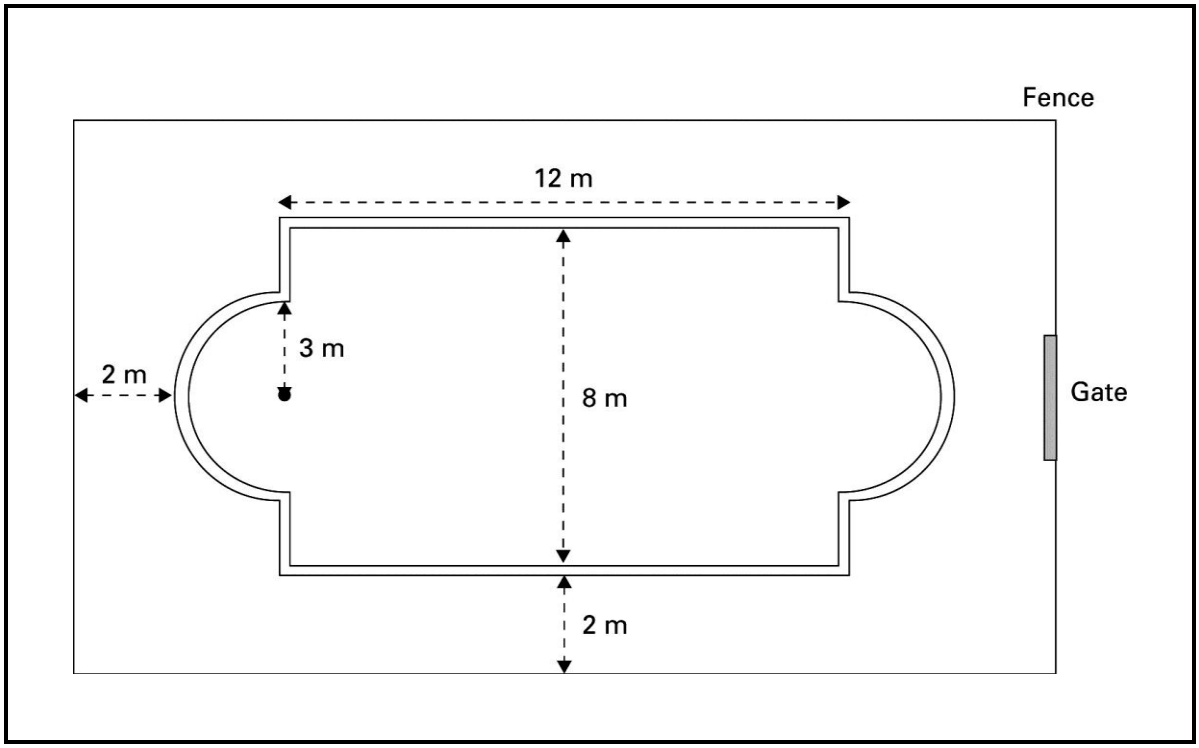

The area of a circle is: $A = \pi r^2$

3.1 The volume of the pool is 223,69 m^3. Prove that the pool is 1,8m deep. (5)

3.2 If the water level has to be 20 cm below the top of the pool, what volume of water can the pool hold? (3)

3.3 With the pool filled up to 20 cm below the top of the pool, what percentage of the pool will be full? (2)

3.4 If 1 cm^3 = 1 ml of water, how many litres of water are needed to fill the pool up to 20 cm below the top of the pool? (4)

3.5 The roof of the community room at the flats needs a new roof. The dimensions of the building are shown below:

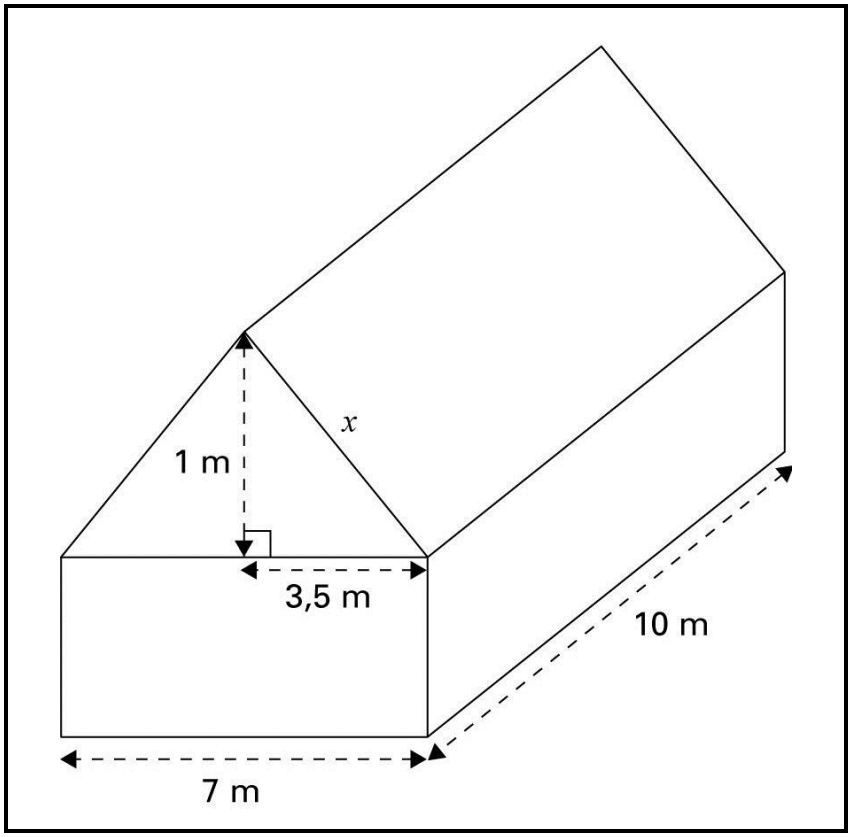

Calculate the surface area of the roof. (The area of the roof to be tiled.) (6)

[20]

QUESTION 4

Study the following house plan for a 2 bedroom home:

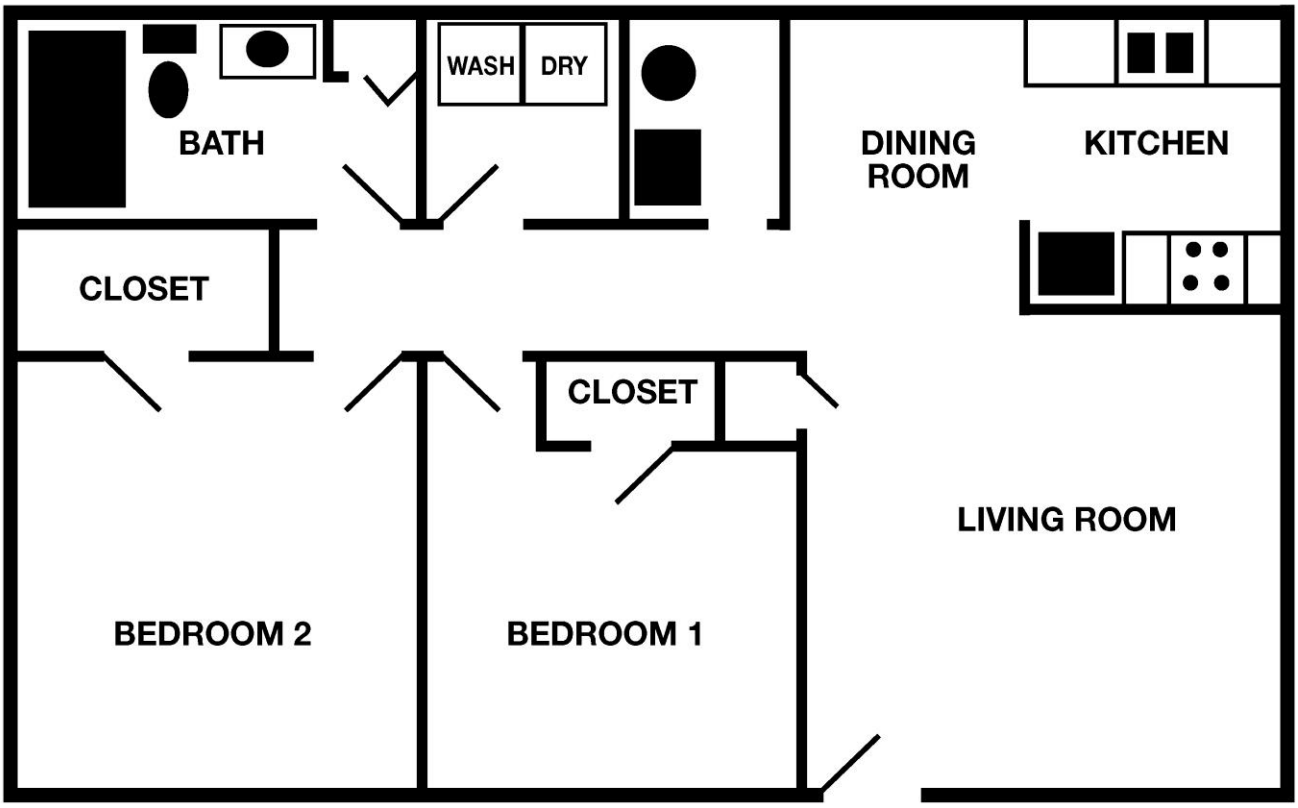

(Source: www.houseplans.net)

4.1 Criticise the house plan in detail, giving both positive and negative comments. (5)

4.2 If the living room will be 5.2m x 5.2m, determine the scale used for the above plan. (4)

4.3 Use the scale you determined in 4.2 to calculate the dimensions of the kitchen. (3)

4.4 The people moving into the house are planning to have two children. Use a two way table or a tree diagram to determine the probability that they will have 2 girls. (3)

[15]

QUESTION 5

A group of 150 students took a test out of 40 marks. The following histogram shows the distribution of the marks:

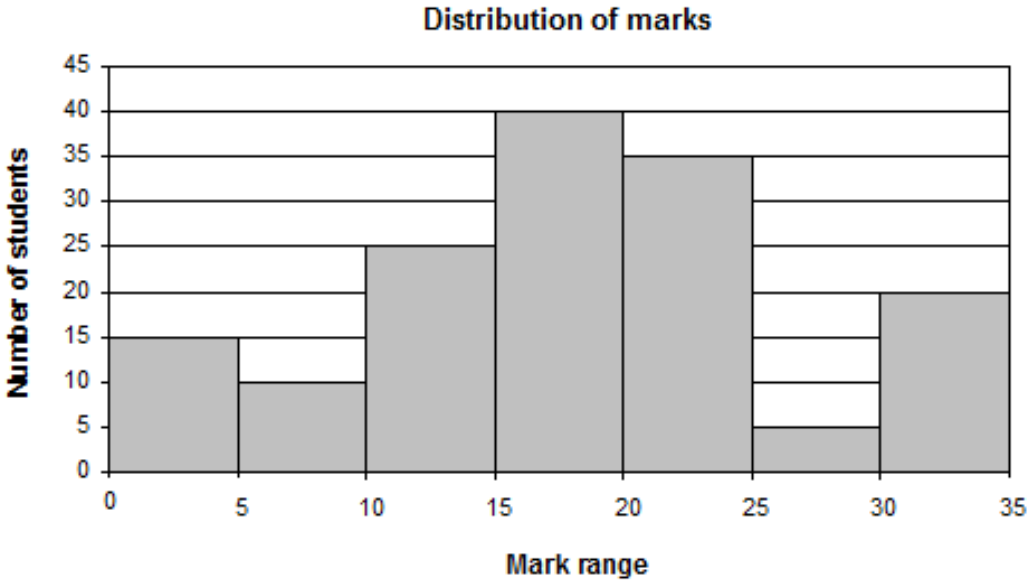

5.1 What is the modal class? (1)

5.2 How many students scored within the modal class? (1)

5.3 What is the probability of a student chosen at random having received at least 25 marks? Write your answer in simplest form. (3)

5.4 Does the histogram suggest that the students did well? Motivate your answer. (2)

5.5 If the same test is given to a group of 600 students who are similar to the original sample of 150 (that is, they have the same level of education, similar levels of ability, etc.), how many students would you expect to get between 10 and 15 marks out of 40? (4)

5.6 A representative from the SAIMS (South African Institute of Misleading Statistics) visits your school. He hands out a survey to the top maths class that aims to measure mathematical ability. He does not visit any other classes and takes the results to represent the whole school. Briefly discuss the validity of his methods. (2)

Consider the following graphs and answer the questions that follow:

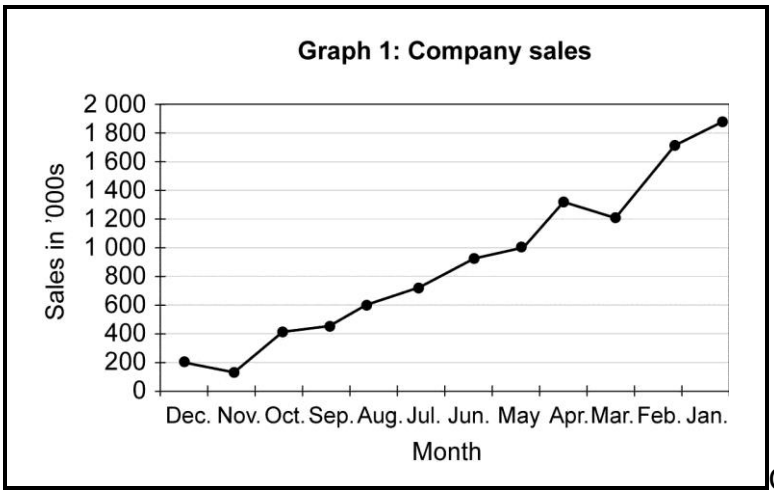

Graph 1

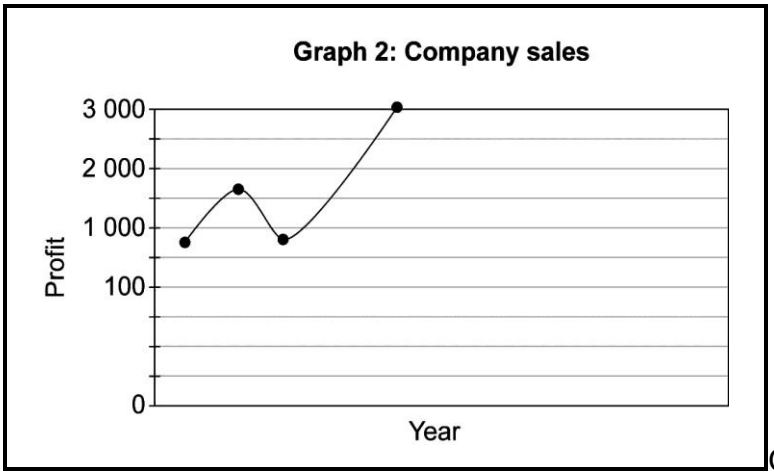

Graph 2

5.7 What is wrong with Graph 1? Explain how or why this graph might be misleading. (2)

5.8 Explain how or why Graph 2 might be misleading or inaccurate. (2)

[17]

QUESTION 6

Malaria is a mosquito-borne infectious disease of humans and other animals. Malaria causes symptoms that typically include fever, fatigue, vomiting, and headaches. In severe cases it can cause yellow skin, seizures, coma or death. The disease is transmitted by the biting of mosquitos, and the symptoms usually begin ten to fifteen days after being bitten. If not appropriately treated, people may have recurrences of the disease months later.

Study the two graphs in **Appendix A** the answer the following questions.

6.1 Write 2-3 sentences describing what patterns you see in Graph A. (3)

6.2 What might be the cause/reasons for the trends in Graph A? (3)

6.3 In some years the number of deaths due to malaria is higher than the number of cases of malaria (see Graph B). How might this be possible? (2)

6.4 Use the graphs to answer the following questions regarding the level of Malaria in various years.

6.4.1 In which two years was the total cases of malaria highest? Give the number of cases in each year. (2)

6.4.2 What could a possible reason be for the number of cases during these years in 6.4.1 to be higher than any of the other years? (1)

6.5 Explain why you would not use a pie chart to represent the data in Graph B. (2)

[13]

--- END OF EXAM – WELL DONE ---

APPENDIX A

Graph A

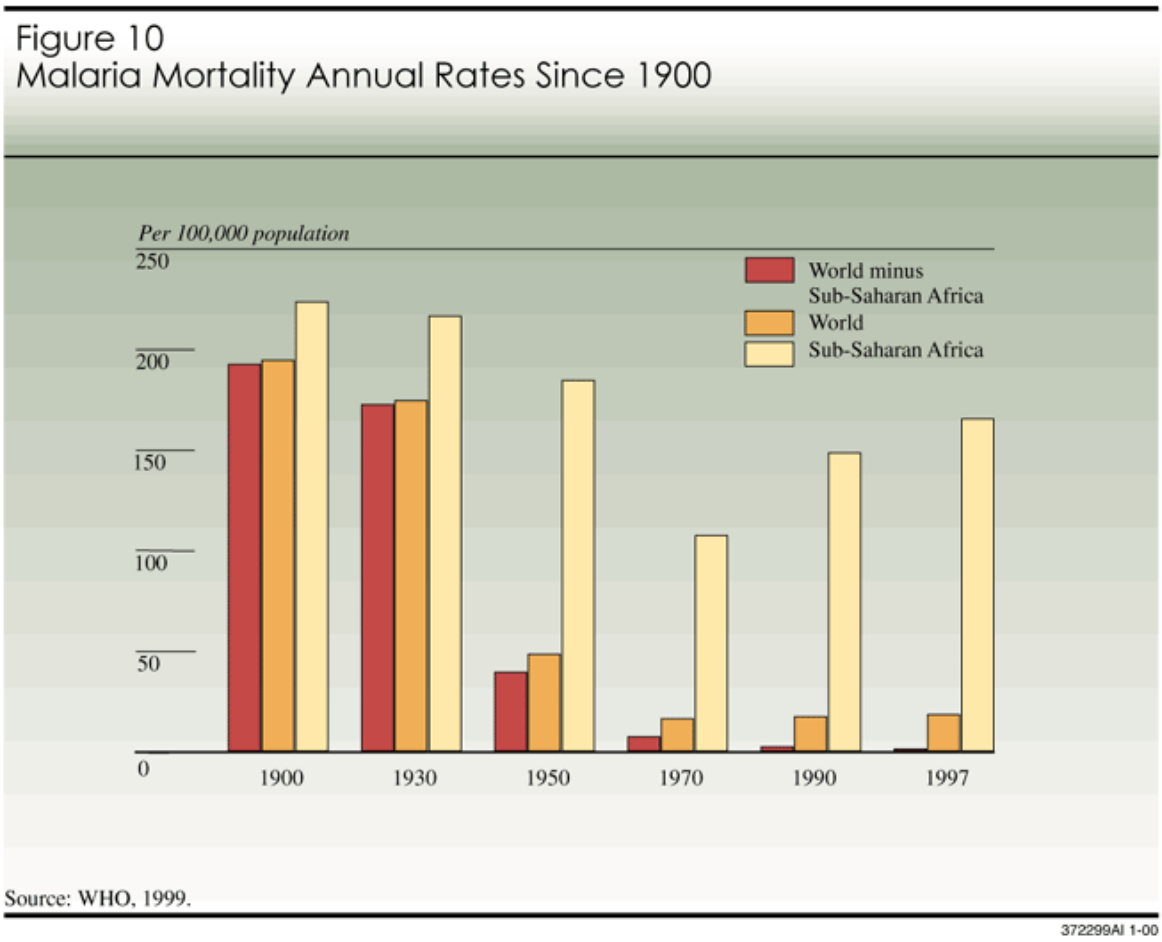

(Source: Google images. fas.org)

Graph B

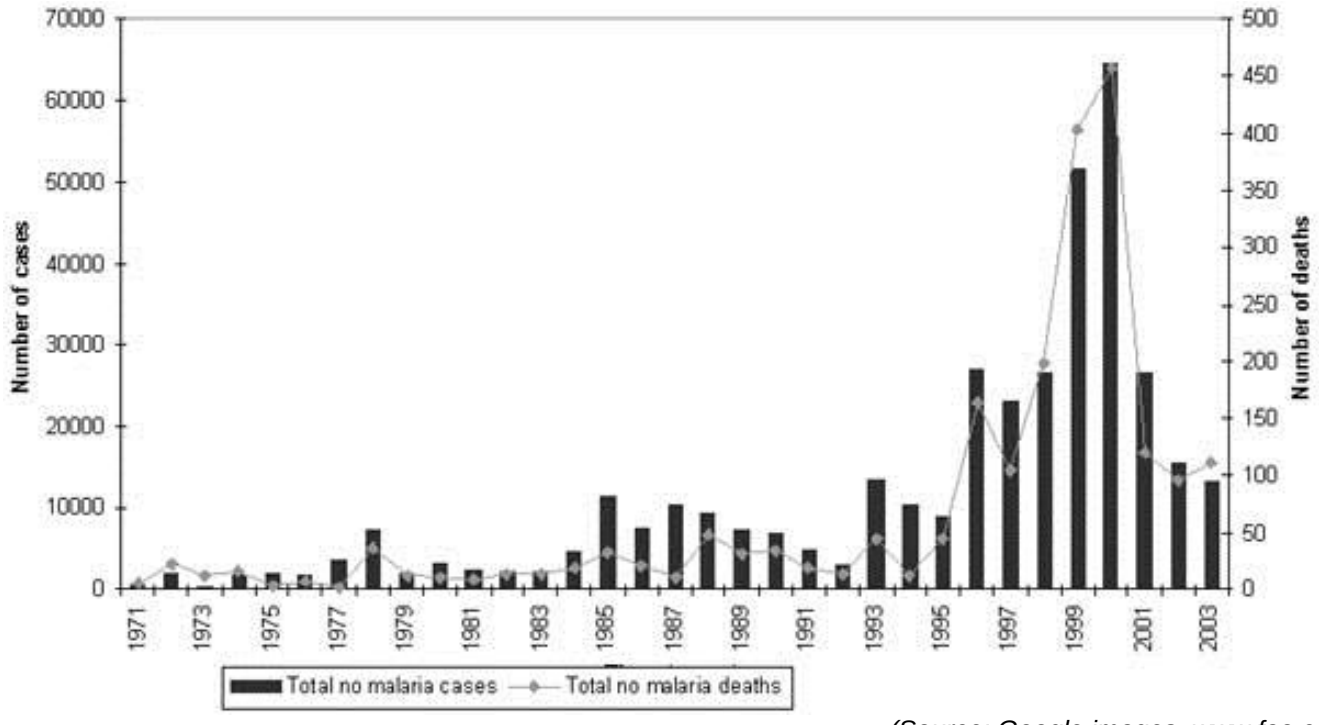

(Source: Google images. www.fao.com)